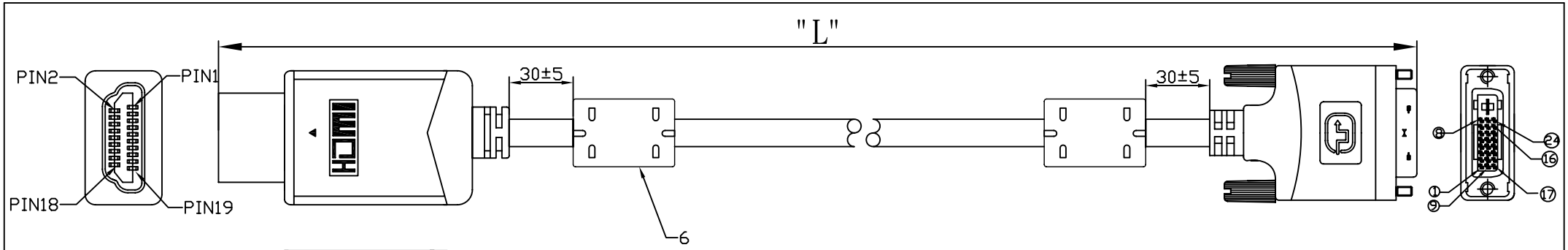

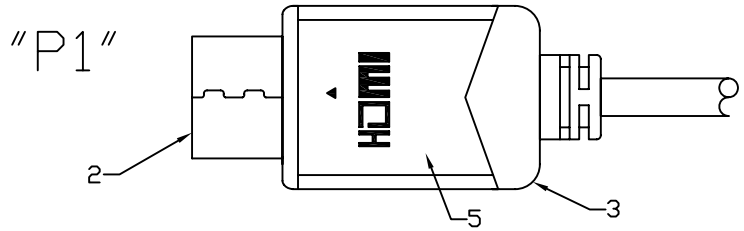

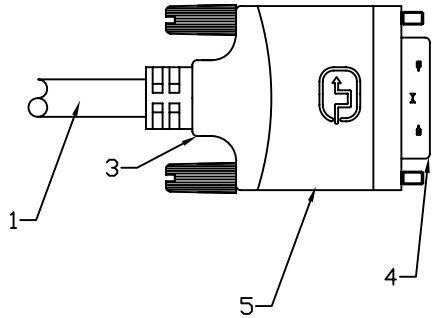

HDMI-DVI25-1.3-5	5000±50
HDMI-DVI25-1.3-1.8	1800±30
HDMI-DVI25-1.3-3	3000±50

DVI24+1M	HDMI 19P
1	3 (TMDS Data 2-)
2	1 (TMDS Data 2+)
3	2 (TMDS Data 2 Shield)
9	6 (TMDS Data 1-)
10	4 (TMDS Data 1+)
11	5 (TMDS Data 1 Shield)
17	9 (TMDS Data 0-)
18	7 (TMDS Data 0+)
19	8 (TMDS Data 0 Shield)
24	12 (TMDS Clock -)
23	10 (TMDS Clock +)
22	11 (TMDS Clock Shield)
14	18 (+5V Power)
15	17 (Ground)
6	15 (DCC Clock)
7	16 (DCC Data)
16	19 (Hot Plug Detect)
SHELL	SHELL

ELECTRICAL TEST:

1. CURRENT RATING: DC 0.5A
2. WITHSTANDING VOLTAGE: DC 300VDC
3. INSULATION RESISTANCE: 50Mohm
4. CONDUCTIVE RESISTANCE: 2ohm

No.	DESCRITION	UNIT	Q'TY
6	CORE:28.5*ø16.0*ø9.5		
5	PVC MOLDED RED IN COLOR		
4	DVI24+1 MALE SOLDER TYPE SHELL PLATED:GOLD		
3	PVC MOLDED BLACK IN COLOR		
2	HDMI A MALE SOLDER TYPE SHELL PLATED:GOLD	PCS	2
1	HDMI CABLE UL20276 28AWG/4P+28AWG/1P+28AWG/5C+AB JACKET BLACK OD:7.0mm	PC	1

REV.	DESCRIPTION	DATE
B	CABLE HDMI A-TYPE MALE TO DVI 24+1MALE	07/10/3

UNLESS OTHERWISE SPECIFIED TOLERANCE
ANG. ±5°
0. ±0.5
.0 ±0.3
.00 ±0.2

SCALE: NONE UNIT: mm
DRAWN Xing Fa 07/10/3
CHECKED eric 07/10/3
APPROVED
SIZE A4 REV. B

DUN CHENG TECH. CORP.,
TEL:886-2-26739970 FAX:886-2-26739980

DRAWN NAME: DVI-HDMI-AL-XX-RED
PRODUCT NO.
FILE NAME: