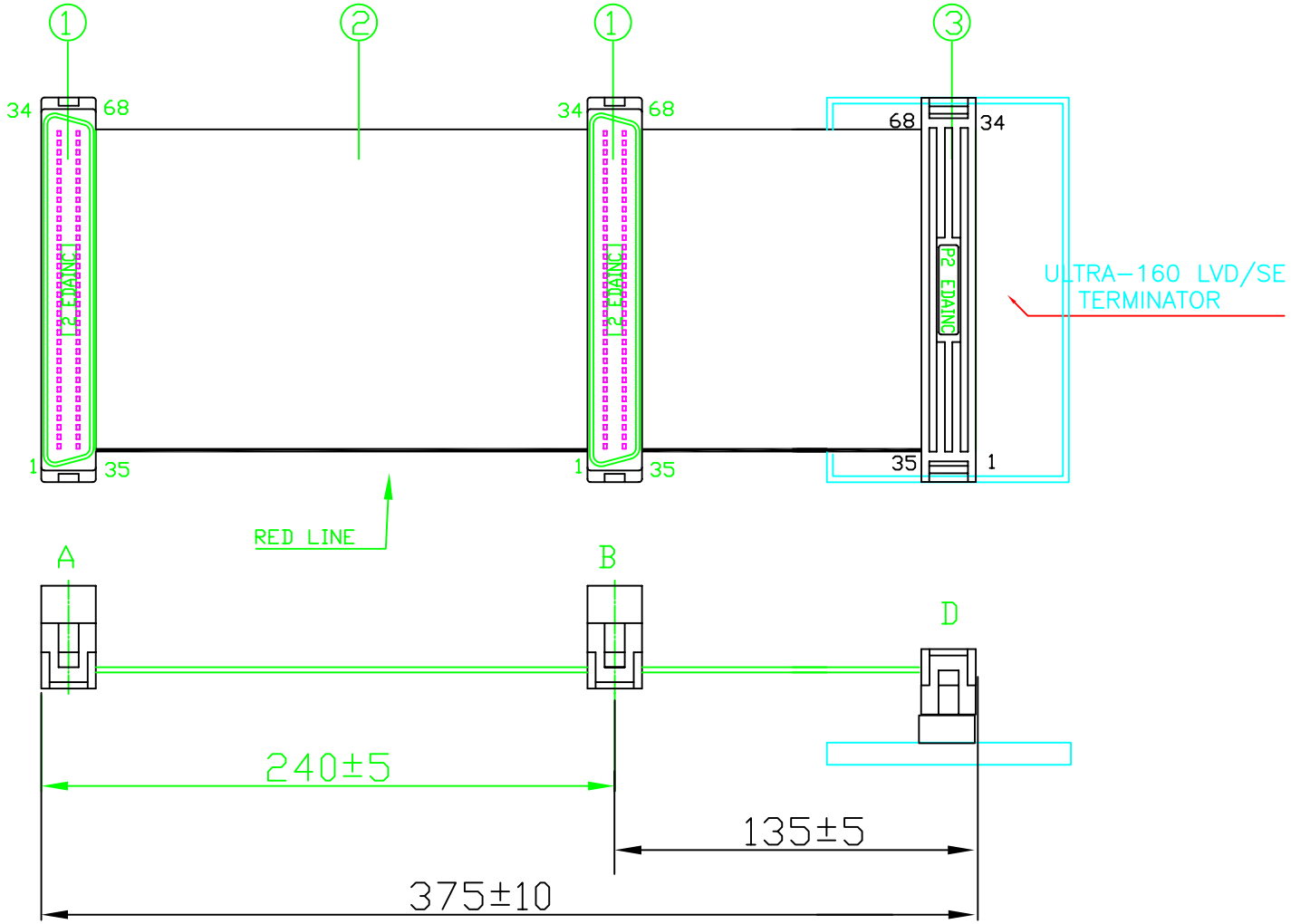

① HDP68PIN MALE*3

② HITACHI 20047 PVC UL20528 TWIST PAIR SPAN 125MM

③ ULTRE-160 LVD/SE TERMINATOR(L68S05-A-1)

A	P68C1-0375-3M	FLAT CABLE HPD68PIN MALE*3 W/LVD/SE L: 0.375METER	01/27/00
REV.		DESCRIPTION	DATE

UNLESS OTHERWISE SPECIFIED TOLERANCE
ANG. ±5°
0. ±0.5
.0 ±0.3
.00 ±0.2

SCALE: 1:1 UNIT: mm

DRAWN MICHAEL 01/27/00

CHECKED / /

APPROVED / /

SIZE A4 REV. A

DUN CHENG TECH. CORP.,
TEL:886-2-26739970 FAX:886-2-26739980

DRAWN NAME: P68C1-0375-3M

PRODUCT NO. P68C1-0375-3M

FILE NAME: P68C1-0375-3M