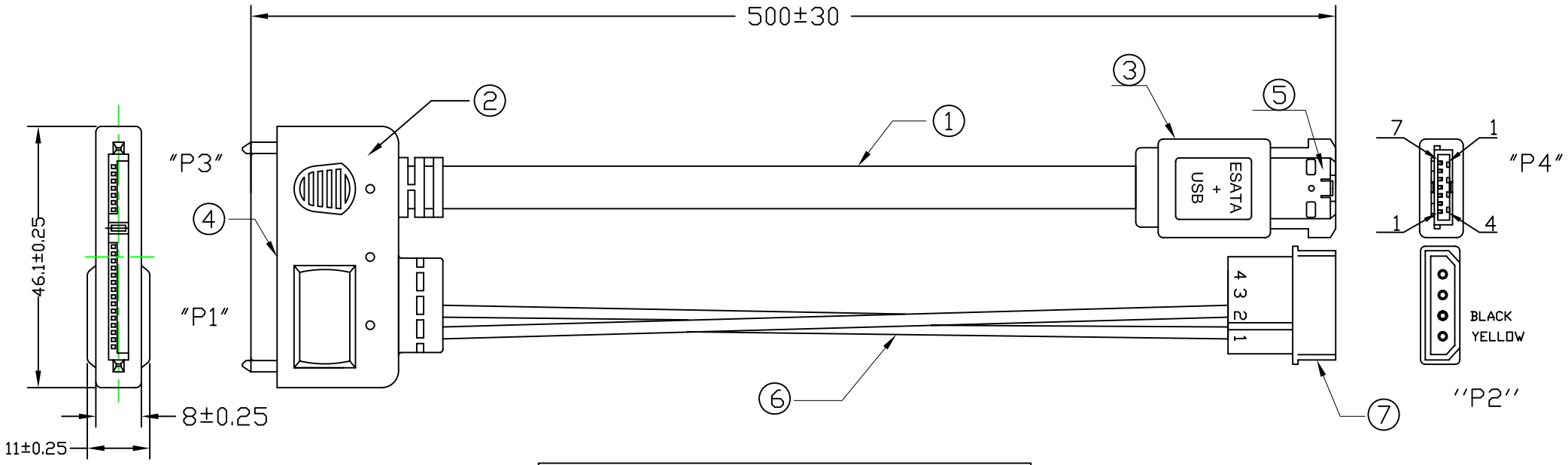

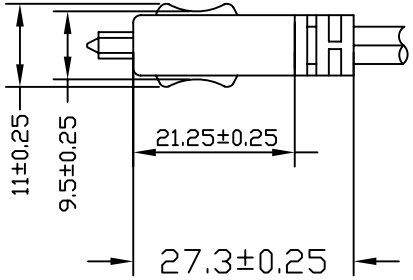

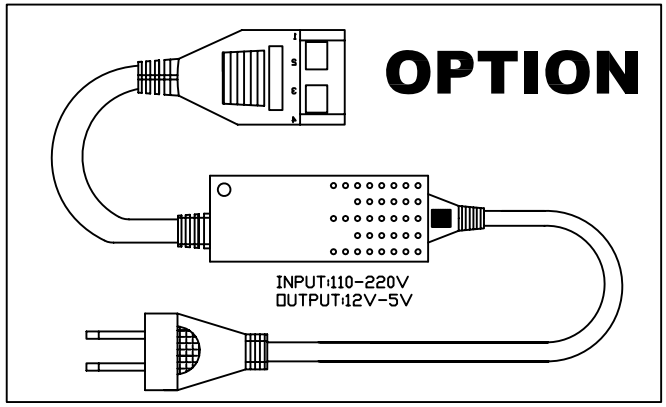

PIN ASSEMBLY

P3		P4
1	—	1
2	—	2
3	—	3
4	—	4
5	—	5
6	—	6
7	—	7

PIN ASSEMBLY

P1		P2	P4
1, 2, 3	YELLOW	1	
4, 5, 6	BLACK	2	
7, 8, 9	RED		1
10, 11, 12	BLACK		4
13, 14, 15	NC		

ITEM	DESCRIPTION	Q'TY
7	BIG 4PIN MALE HOUSING TERMINAL	
6	WIRE:UL1007 18AWG YELLOW BLACK IN COLOR	
5	ESATA+USB CONN SHELL PLATED NICKEL	1
4	SERIAL ATA 22PIN CONNECTOR COLOR: BLACK	1
3	55P PVC MOLD COLOR: BLACK	
2	55P PVC MOLD COLOR: BLACK	
1	NONUL 30AWG/2PR+24AWG/2C+AB OD:5.8MM JACKET BLACK IN COLOR	1

REV.	DESCRIPTION	DATE
A		09/3/19

UNLESS OTHERWISE SPECIFIED TOLERANCE
ANG. ±5°
0. ±0.5
.0 ±0.3
.00 ±0.2

SCALE: NONE	UNIT: mm	DUN CHENG TECH. CORP., TEL:886-2-26739970 FAX:886-2-26739980	
DRAWN Xing Fa	09/3/19	DRAWN NAME: SATA22C-EUC-PW-050	
CHECKED			
APPROVED		PRODUCT NO.	
	SIZE A4	REV. A	FILE NAME: