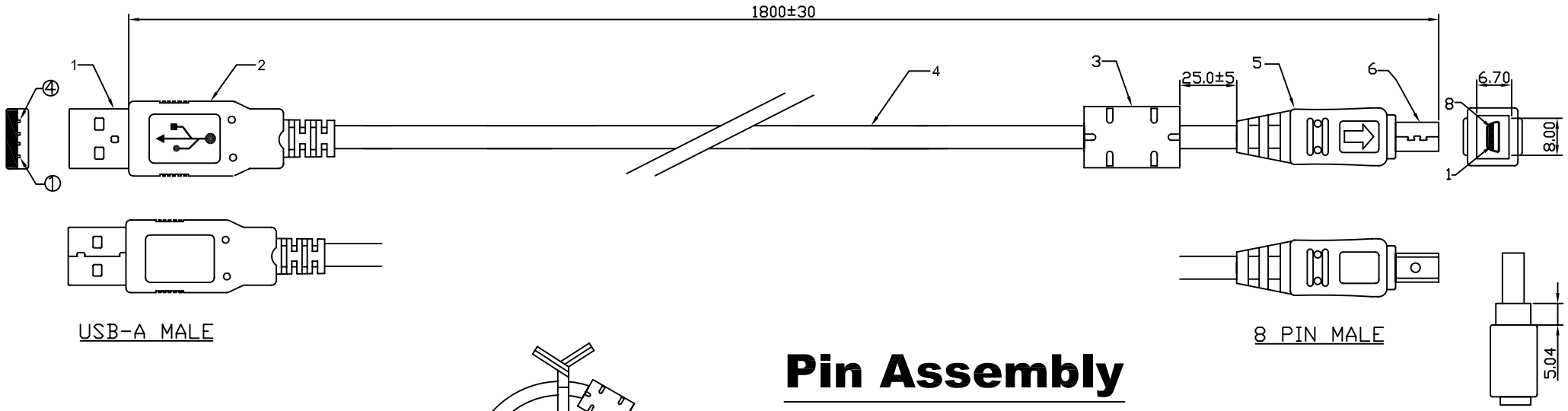

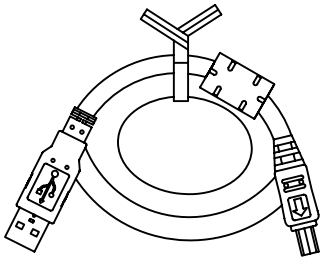

Pin Assembly

P.1		P.2
1	RED 28AWG	8
2	GREEN 28AWG	7
3	WHITE 28AWG	5
4	BLACK 28AWG	6
G		G

ELECTRONIC TEST:

1.OPEN/SHORT/INTERMITTE:100%.

2.INSULATION RESISTANCE:DC 250V AT 10ms R>10MΩ

3.CONTACT RESISTANCE:<5Ω .

NO	DESCRIPTION	Q'TY	UNITS
6	MINI USB 8 PIN (Kodak)MALE SINGLE ROW G/F	1	PCS
5	PVC MOLDED BLACK IN COLOR		
4	UL2725 28#*1P+28AWG*2C+ADB REV:2.0 BLACK IN COLOR OD:3.5		
3	FERRITE CORE L25mm*ID∅5.6*OD∅12mm	1	PCS
2	PVC MOLDED BLACK IN COLOR		
1	USB A TYPE MALE SOLDER TYPE CONNECTOR INSULATOR WHITE COLOR	1	PCS

REV.	DESCRIPTION	DATE
A		05/08/19

UNLESS OTHERWISE SPECIFIED TOLERANCE
ANG. ±5°
0. ±0.5
.0 ±0.3
.00 ±0.2

SCALE: NONE
UNIT: mm
DRAWN ERIC XU 05/08/19
CHECKED
APPROVED
SIZE A4
REV. A

DUN CHENG TECH. CORP.,
TEL:886-2-26739970 FAX:886-2-26739980

DRAWN NAME: USB2-AM-KODAK-183-C
PRODUCT NO.
FILE NAME: